KRÜGER Technology S.L.

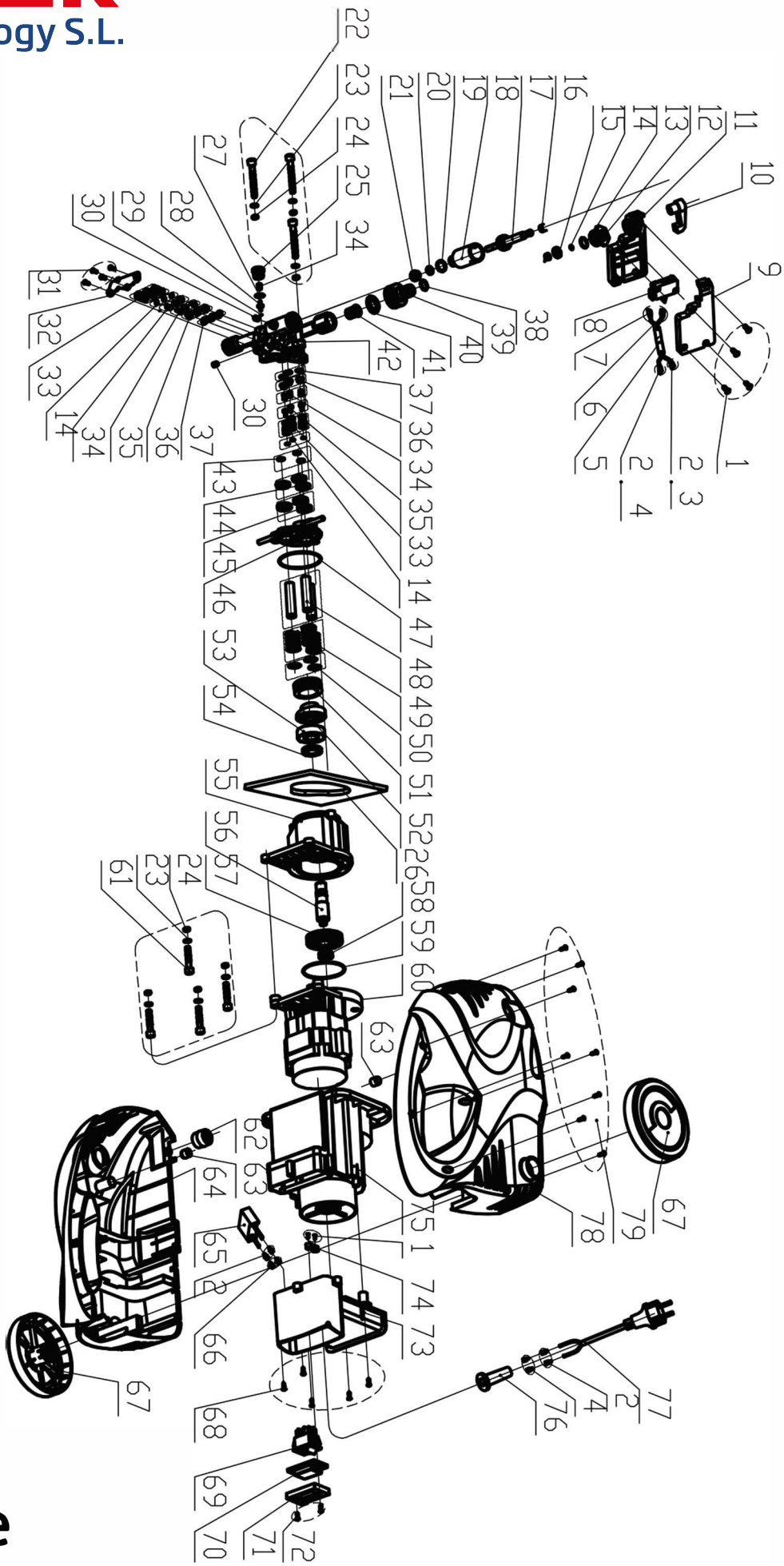

Despiece KH501